Applicable cable	
Items	Applicable condition
Conductor size	AWG 24
Insulation O.D.	∅1.1 to 1.25 mm
Braid Shield	Tin plating
Sheath O.D.	∅5.5mm - ∅7.2mm

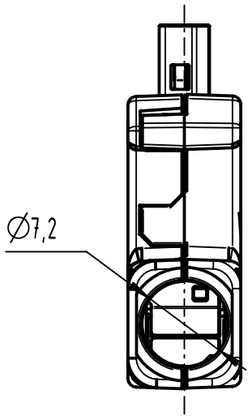

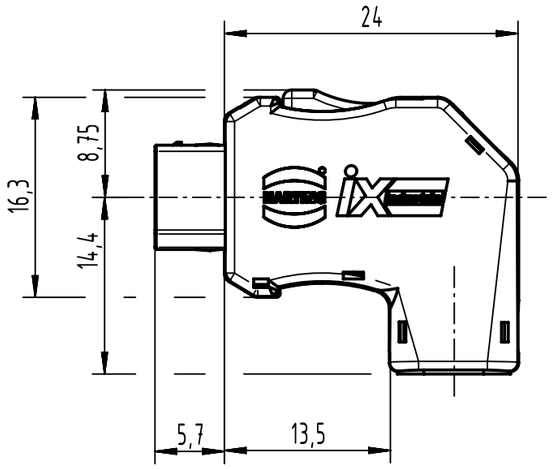

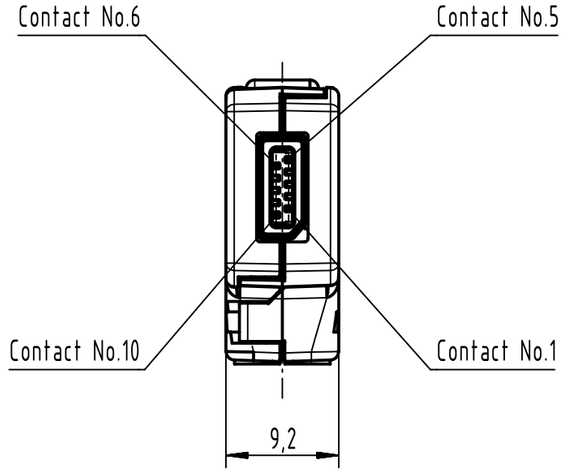

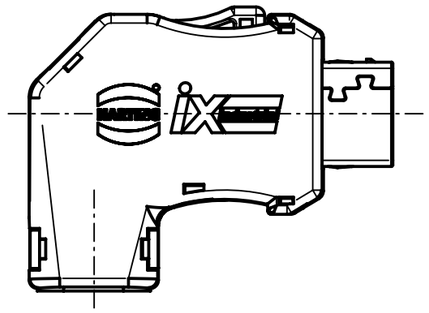

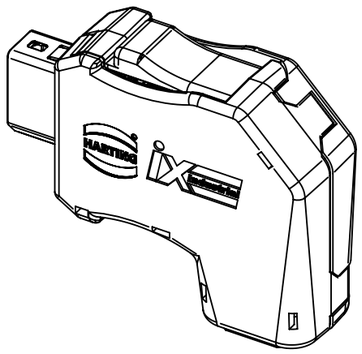

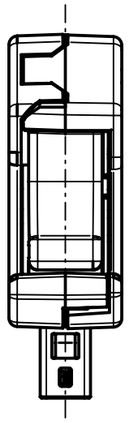

Pin	10/100 Mbit/s	1/10 Gbit/s
1	TX+	BI_DA+
2	TX-	BI_DA-
3	N.C.	N.C.
4	N.C.	BI_DC+
5	N.C.	BI_DC-
6	RX+	BI_DB+
7	RX-	BI_DB-
8	N.C.	N.C.
9	N.C.	BI_DD+
10	N.C.	BI_DD-

Contact material: copper alloy
Contact area: Gold 0.2µm min.
Wiring area: Gold 0.03µm min.
Under plating: Nickel 2µm min.

All Dimensions in mm
Original Size DIN A3

Scale 2:1

Free size tol.

Ref.

Sub.

All rights reserved

Department EL PD

HARTING
D-32339 Espelkamp

Created by	Inspected by	Standardisation	Date	State
406403	PREOTU	ROEBEN	2022-05-13	Final Release

Title: ix Industrial 10A-1 plug A1-I24

Doc-Key / ECM-Nr.: 100903357/UGD/000/B 500000216890

Type: TB

Number: 09451812582XL

Rev.: B

Page: 1/2

A3

Shield Shell delivery form

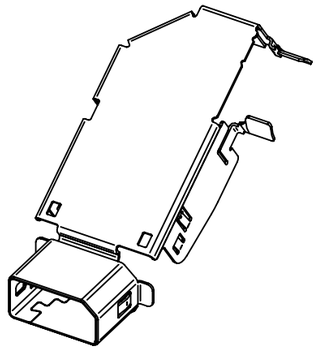

Product Structure

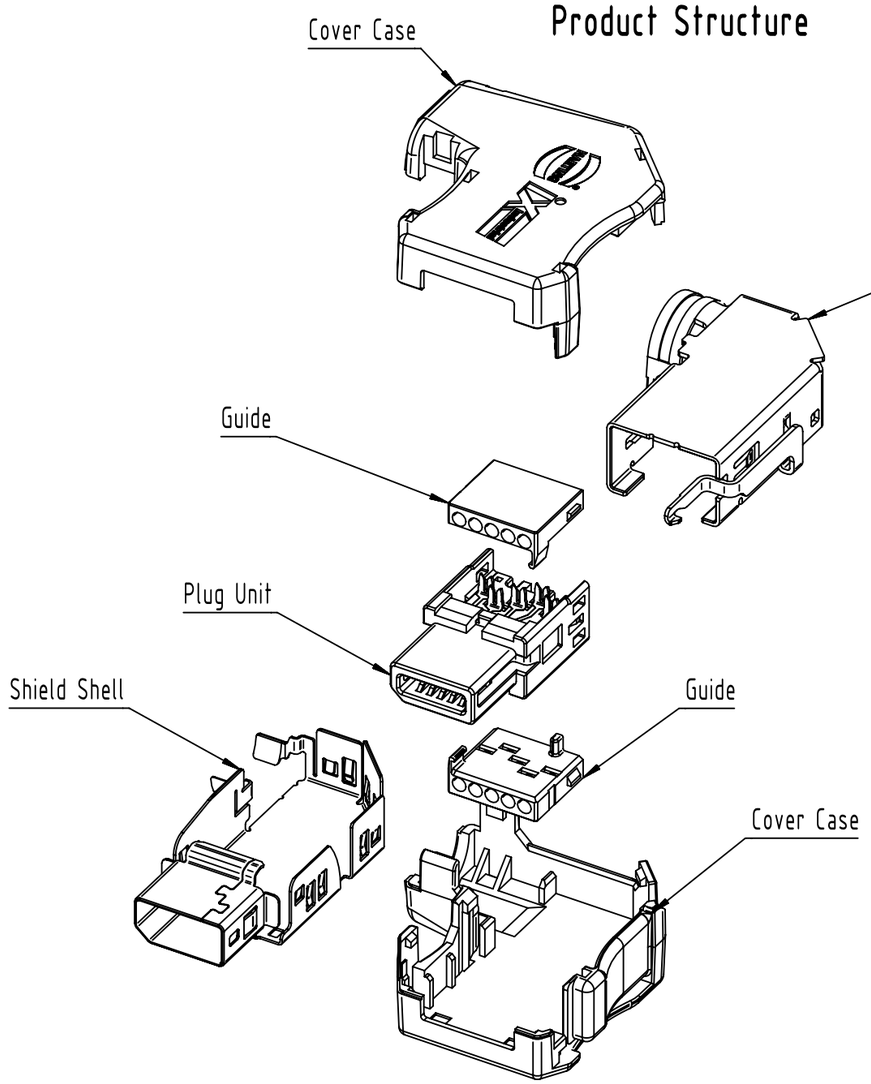

Plug Unit

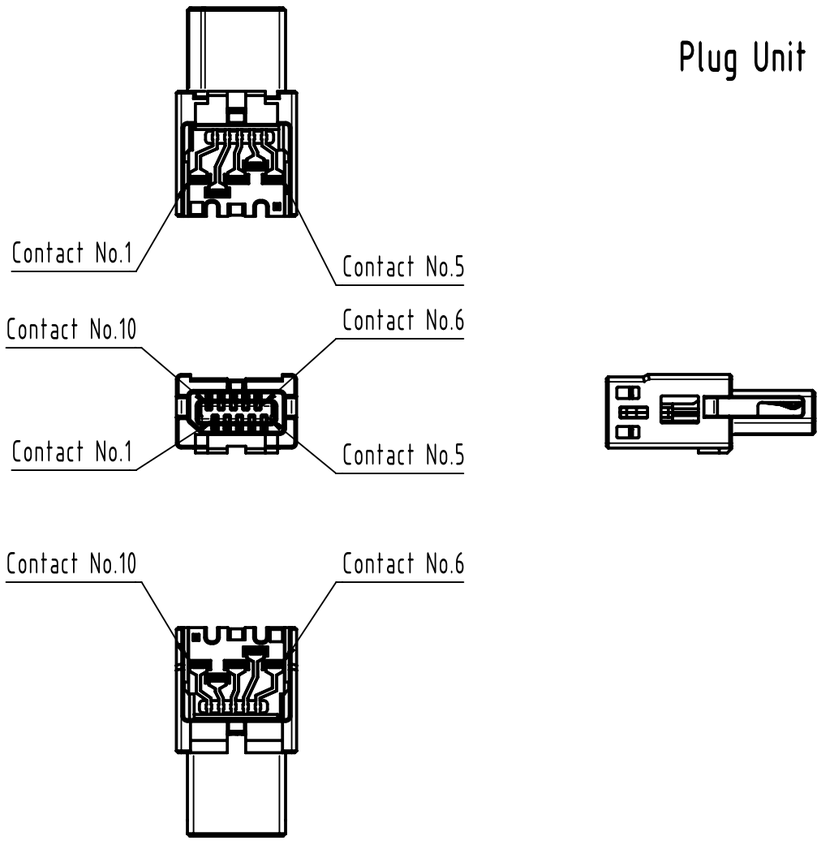

Mating condition (2:1)

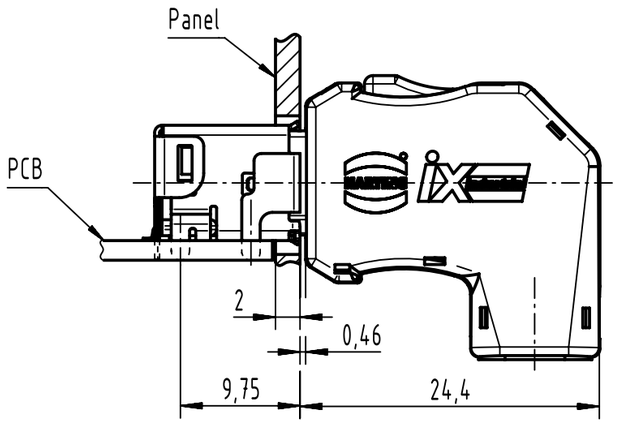

All Dimensions in mm Original Size DIN A3	Scale 2:1	Free size tol.		Ref.	Sub.
All rights reserved Department EL PD	Created by 406403	Inspected by PREOTU	Standardisation ROEBEN	Date 2022-05-13	State Final Release
HARTING D-32339 Espelkamp	Title ix Industrial 10A-1 plug A1-I24				Doc-Key / ECM-Nr. 100903357/UGD/000/B 500000216890
	Type TB	Number 0945181258 2XL		Rev. B	Page 2/2

A3