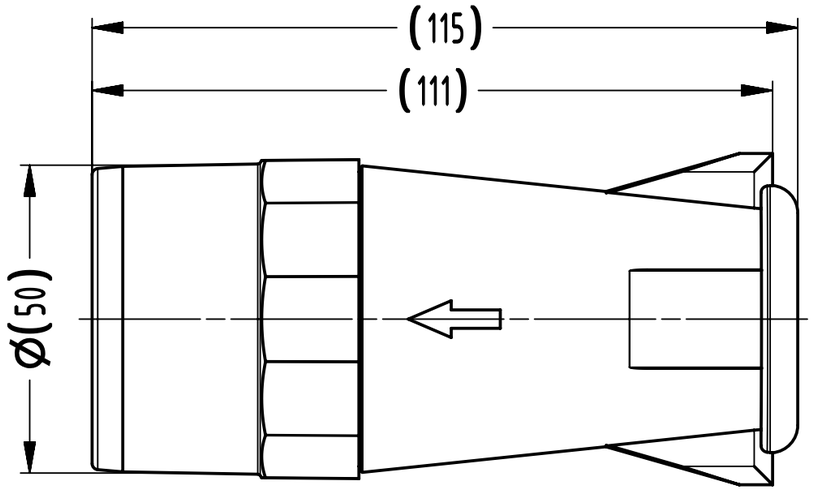

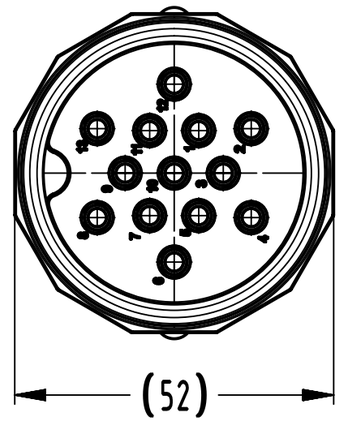

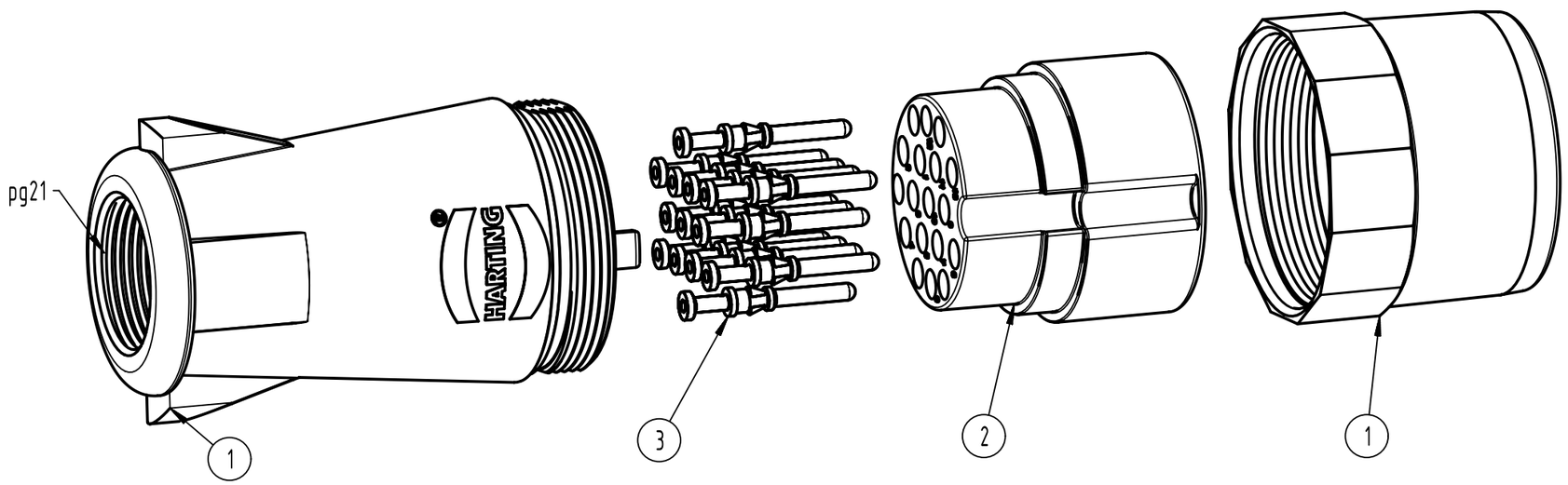

Refer data sheet for product specification.

S. No.	Part number	Part Description	UOM	QTY / ASSY
1	09 58 001 1440	UIC558-HTE-13PIN-PG21	PC	1
2	09 58 013 3001	UIC558-13PIN-MI-CRT	PC	1
3	09 58 000 6505	UIC558-MC-CRT-0.75-1.0 mm²/18 AWG-NI	PC	13

All Dimensions in mm
Original Size DIN A3

Scale 1:1

Free size tol.

Ref.

Sub.

All rights reserved

Department EL PD

HARTING
D-32339 Espelkamp

Created by	Inspected by	Standardisation	Date	State
404742 Krishnamoorthy	402933 Krishnasamy	ROEBEN Roeben	2021-12-21	Final Release

Title UIC 558 13PIN PLUG KIT-MC-NI-CND

Doc-Key / ECM-Nr. 100954938/UGD/000/A 500000208511

Type TB

Number 09 58 013 1002

Rev. A

Page 1/1

A3