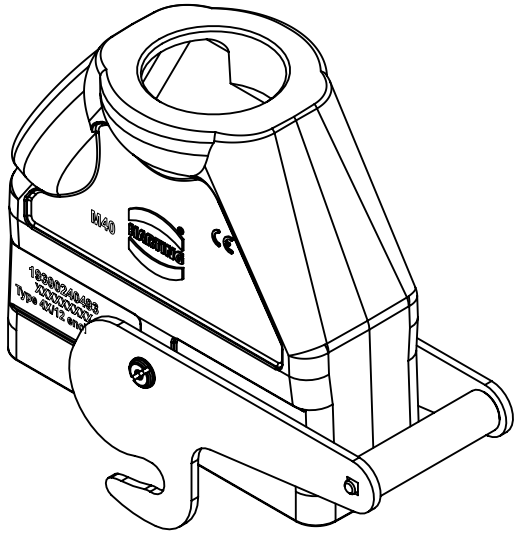

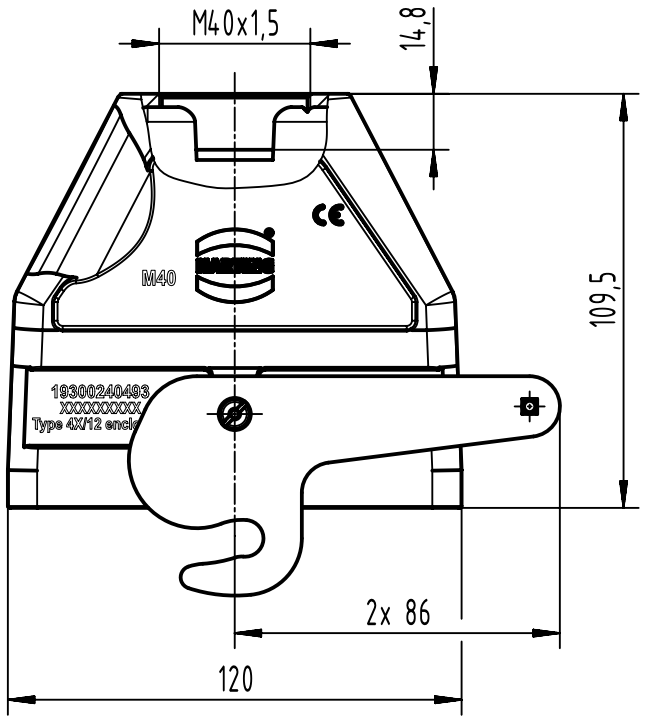

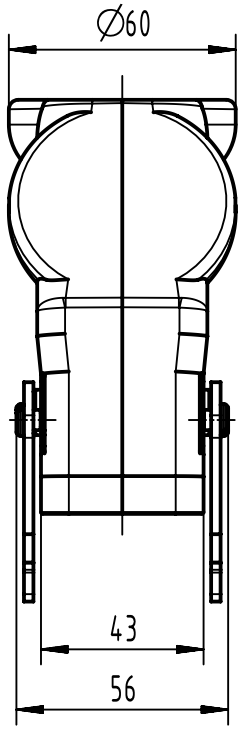

All Dimensions in mm Original Size DIN A4	Scale 1:2	Free size tol.		Ref. Sub.	
All rights reserved Department EL PD	Created by HELLMANN	Inspected by GERB	Standardisation	Date 2021-10-04	State Final Release
HARTING D-32339 Espelkamp	Title Han 24B HTE-HC-CL-M40				Doc-Key / ECM-Nr. 100809987/UGD/004/D 500000201393
	Type TB	Number 19 30 024 0493		Rev. D	Page 1/1

A4