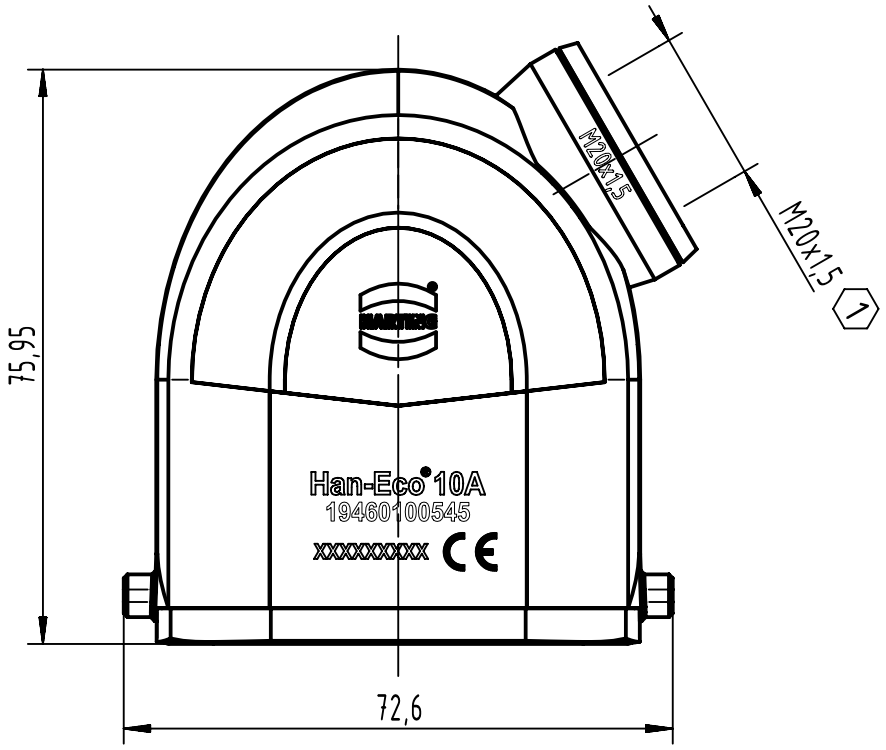


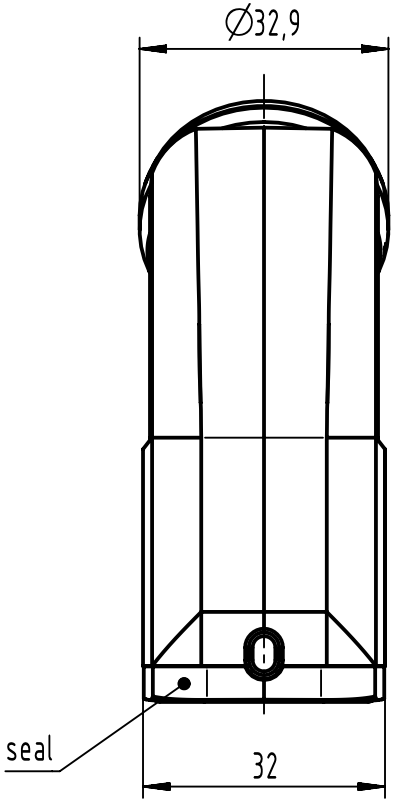


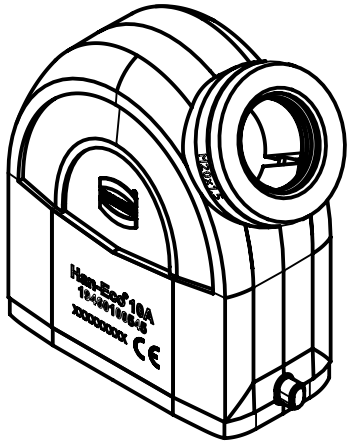

1 tightening torque max. 7Nm

| | | | | | |
|---|---|---|---|---|---|
| All Dimensions in mm Original Size DIN A4 | Scale 1:1 | Free size tol. | | Ref. Sub. | |
| All rights reserved | Created by 102700 | Inspected by SUNDERMEIER | Standardisation | Date 2021-08-12 | State Final Release |
| Department EL PD | Title Han-Eco 10A-HSE-M20 | | | | Doc-Key / ECM-Nr. 100597608/UGD/001/C 500000200802 |
| HARTING D-32339 Espelkamp | Type TB | Number 19 46 010 0545 | | Rev. C | Page 1/1 |

All rights reserved

A4