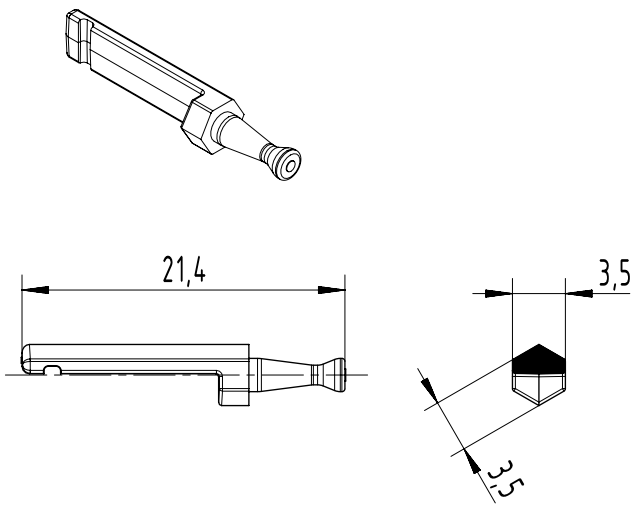

kind of delivery

(1:1)

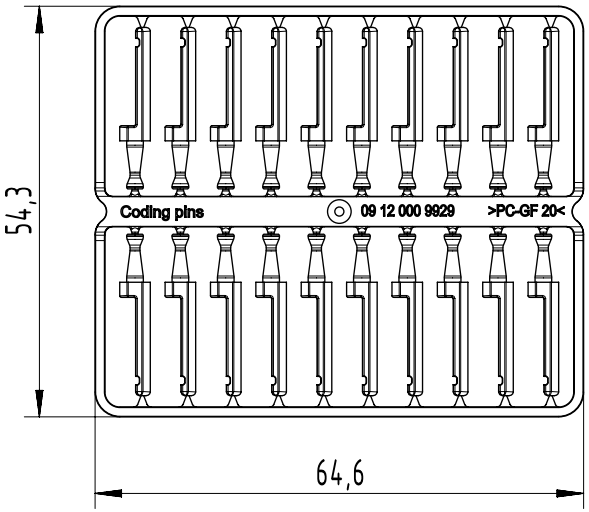

coding possibilities by the example of Han Q 5/0

male

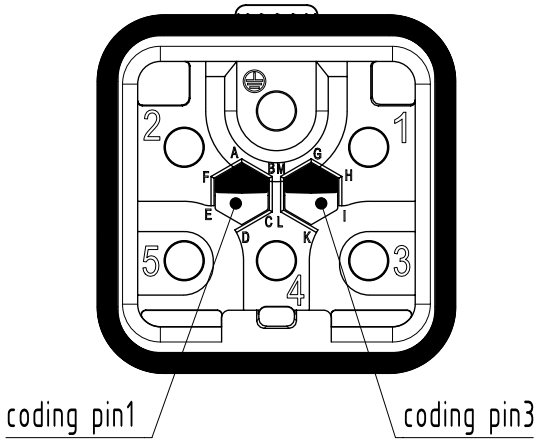

female

possibility	coding				possibility	coding			
	pin1	pin2	pin3	pin4		pin1	pin2	pin3	pin4
1.	A	A	G	G	19.	A	A	K	K
2.	B	B	G	G	20.	B	B	K	K
3.	C	C	G	G	21.	C	C	K	K
4.	D	D	G	G	22.	D	D	K	K
5.	E	E	G	G	23.	E	E	K	K
6.	F	F	G	G	24.	F	F	K	K
7.	A	A	H	H	25.	A	A	L	L
8.	B	B	H	H	26.	B	B	L	L
9.	C	C	H	H	27.	C	C	L	L
10.	D	D	H	H	28.	D	D	L	L
11.	E	E	H	H	29.	E	E	L	L
12.	F	F	H	H	30.	F	F	L	L
13.	A	A	I	I	31.	A	A	M	M
14.	B	B	I	I	32.	B	B	M	M
15.	C	C	I	I	33.	C	C	M	M
16.	D	D	I	I	34.	D	D	M	M
17.	E	E	I	I	35.	E	E	M	M
18.	F	F	I	I	36.	F	F	M	M

All Dimensions in mm
Original Size DIN A4

Scale 2:1

Free size tol.

Ref.

Sub.

All rights reserved

Department EL PD

Created by longl

Inspected by wangst

Standardisation

Date 01-Nov-2024

State 40 - Released

Title Han Q_AC_Coding_f.Insert_Q5/0_PIT

Doc-Key / ECM-Nr. DS00212808

HARTING
D-32339 Espelkamp

Type TB

Design Number DS00212808

SAP Mat. Number 09120009929

Rev. B

Page 1/1

A4